Insens Vibration Detection Equipment

INSENS CONTROLLER

Stand alone controller (C10)

- 32 x Sensors
- 8 x Relay Outputs

INSENS SENSOR

- Vibration Sensor
- Operates on RS485 data line (16 x units per run)
- 1 x sensor every 10 – 20 metres (default 12 metres)
- Mounts to Chain mesh fences
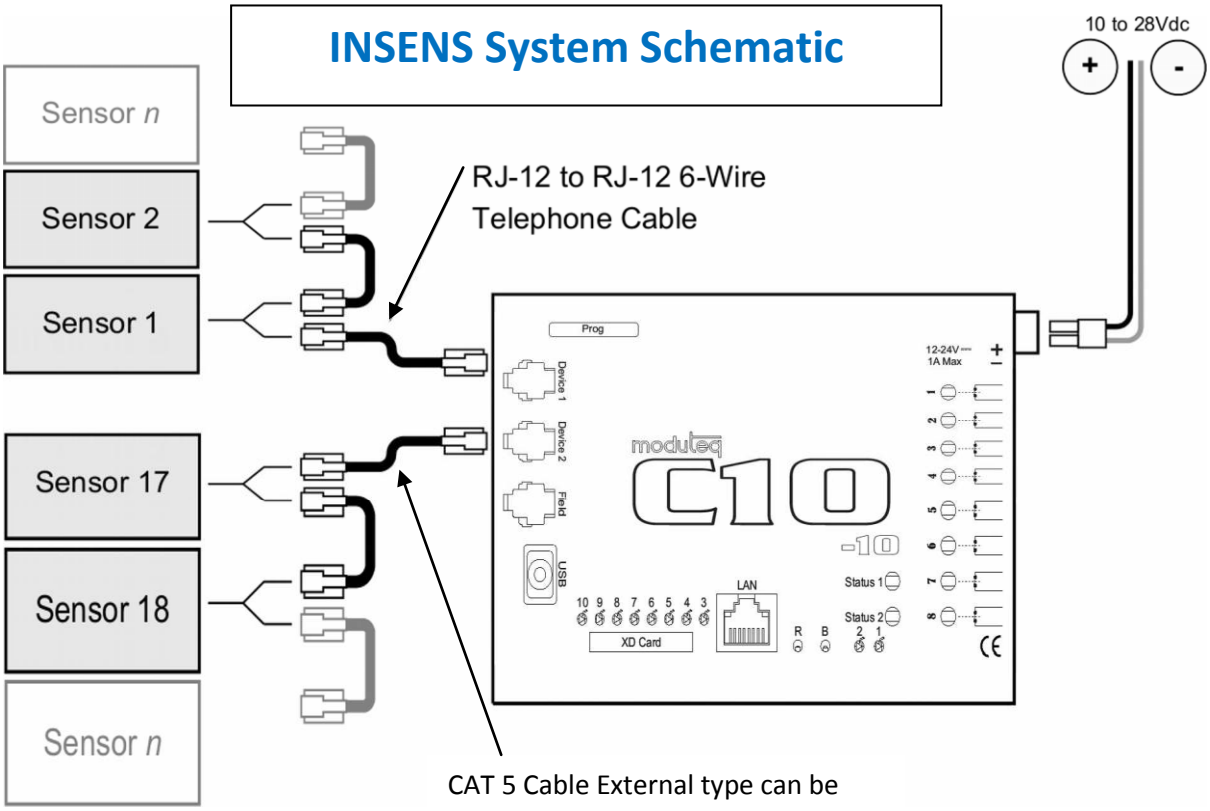
INSENS System Schematic